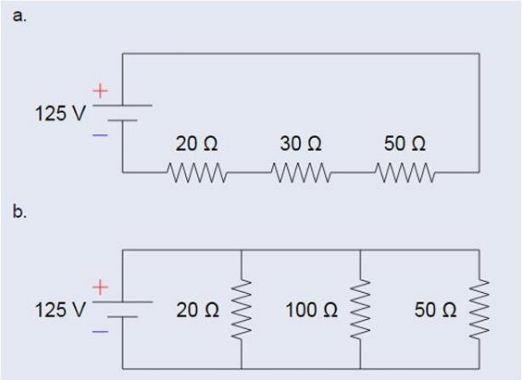

For each of these circuits:

a) Series Circuit

1. Calculate the total resistance in ohms

R = 20Ω +30Ω + 50Ω

= 100Ω

2. Calculate the total current from the power supply

Current = Voltage/ Resistance

= 125/100

= 1.25 A

3. Calculate the current through each resistor

= 1.25A

4. Calculate the Voltage drop through each resistor

Voltage = Current x Resistance

1. **20Ω resistor**

= 1.25 x 20

= 25V

2. **30Ω resistor**

= 1.25 x 30

= 37.5 V

3. **50 Ω resistor**

= 1.25 x 50

= 62.5V

4. Calculate the Power dissipated through each resistor (use Watt's Law: Power = Voltage * Current)

Power = Voltage * Current

1. **20Ω resistor**

= 25 V x 1.25

= 31.25W

2. **30Ω resistor**

= 37.5 V x 1.25

= 46.875 W

3. **50 Ω resistor**

= 62.5 V x 1.25

= 78.125 W

B. Parallel circuit

1. Calculate the total resistance in ohms

1/R = 1/ 20 + 1/100 + 1/50

1/R = 0.05+0.01+0.02=0.08

R = 1/0.08

= 12.5 Ω

2. Calculate the total current from the power supply

Current = Voltage/ Resistance

= 125/12.5

= 10A

3.Calculate the current through each resistor

Current = Voltage/ Resistance

1. **20Ω resistor**

= 125/20

= 6.25 A

2. **100Ω resistor**

= 125/100

= 1.25 A

3. **50 Ω resistor**

= 125/50

= 2.5A

4.Calculate the Voltage drop through each resistor

V20Ω = V100Ω = V50Ω = 125 V

5. Calculate the Power dissipated through each resistor (use Watt's Law: Power = Voltage * Current)

Power = Voltage * Current

1. **20Ω resistor**

= 125 V x 6.25

= 781.25W

2. **100Ω resistor**

= 125 V x 1.25

= 156.25 W

3. **50 Ω resistor**

= 125 V x 2.5

= 312.5 W